Exam Date & Time: 09-May-2024 (02:30 PM - 05:30 PM)

MANIPAL ACADEMY OF HIGHER EDUCATION

FOURTH SEMESTER B.TECH. (ELECTRONICS AND COMMUNICATION ENGINEERING) DEGREE EXAMINATIONS - APRIL / MAY 2024
SUBJECT: ECE 2225/ECE_2225 - MODERN CONTROL THEORY

MODERN CONTROL THEORY [ECE 2225]

Marks: 50 **Duration: 180 mins.**

A

Answer all the questions.

Missing data may be suitably assumed.

1A) The open loop transfer function of a unity feedback system is given by $G(s) = \frac{K}{(s+2)(s^2+2s+2)}$. Sketch the root locus of the system. (5)

1B) Modify the block diagram shown in Fig.Q1B and develop the closed loop transfer function using block diagram reduction techniques. (3)

Fig.Q1B

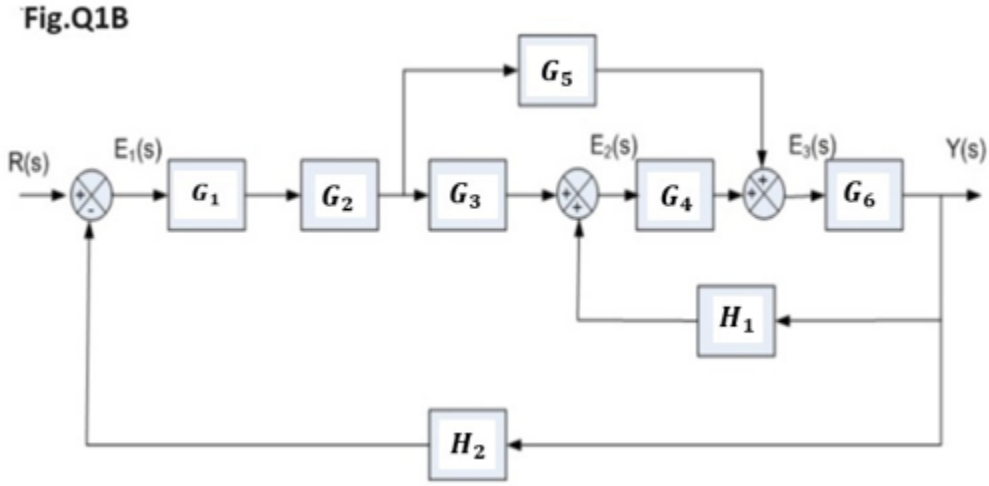

1C) When the system shown in Fig. Q1C. (a) is subjected to a unit-step input, the system output responds as shown in Fig.Q1C (b). Determine the values of K and T from the response curve. (2)

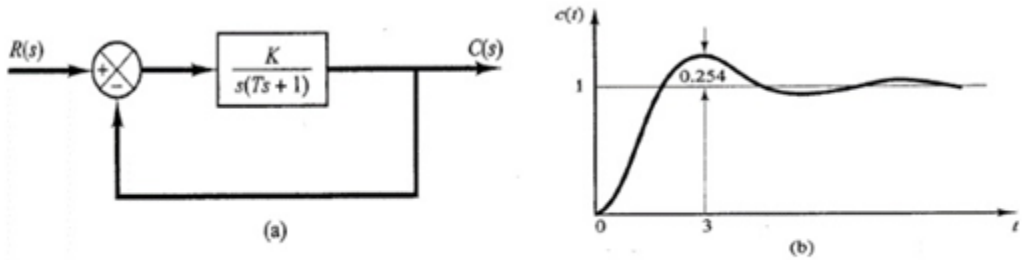

Fig.Q1C

2A) Identify the differential equations governing the mechanical behaviour of the system shown in Fig.Q2A. Draw the FI and FV analogous circuits along with mesh and node equations. (5)

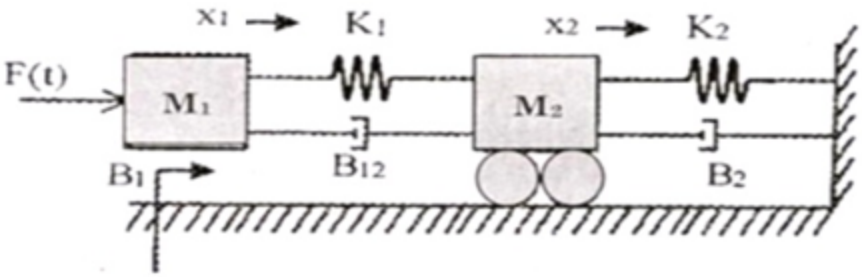

Fig.Q2A

2B) A unit- step response test conducted on a second order system yielded peak overshoot, M_p=0.12, and peak time t_p=0.2s. Obtain the corresponding response indices, M_r, ω_r, ω_b for the system (3)

2C) For a unity feedback control system with open loop transfer function,

$G(s) = \frac{10(s+2)}{s^2(s+1)}$. Find the steady state error when input $R(s) = \frac{3}{s} - \frac{2}{s^2}$ (2)

3A) Determine the stability of a system with characteristic equation $S^6+S^5-2S^4-3S^3-7S^2-4S-4=0$ using Routh Hurwitz criteria (5)

3B) Examine whether the system characterized by the system matrix

$A=\begin{bmatrix}1 & 0 & 2\\ 0 & 2 & 1\\ 0 & 0 & 3\end{bmatrix}$ and the input matrix $B=\begin{bmatrix}1\\ -1\\ 1\end{bmatrix}$ is controllable using Kalman's method. (3)

3C) For the system represented by the system matrix $A=\begin{bmatrix}0 & -1\\ 2 & -3\end{bmatrix}$, determine the State Transition Matrix. (2)

4A) Sketch the Bode plot for a unity feedback system with

OLTF $G(S)H(S) = \frac{K}{S(1+01.S)(1+S)}$ and determine the value of K such that the gain margin is 30dB (5)

4B) OLTF of a system is given by $G(S)H(S) = \frac{1}{1+TS}$ Show that there is a 1dB difference between the asymptotic and the actual Bode magnitude plot at a frequency twice that of corner frequency. (3)

4C) Derive an expression for the rise time of a second order underdamped system when (2)

subjected to a unit step input

5A) Represent the circuit shown in Fig.Q5A in state space domain using physical variable form considering R_1=4kΩ , R_2=4kΩ, C_1=4mF , C_2=4mF, L=4mH

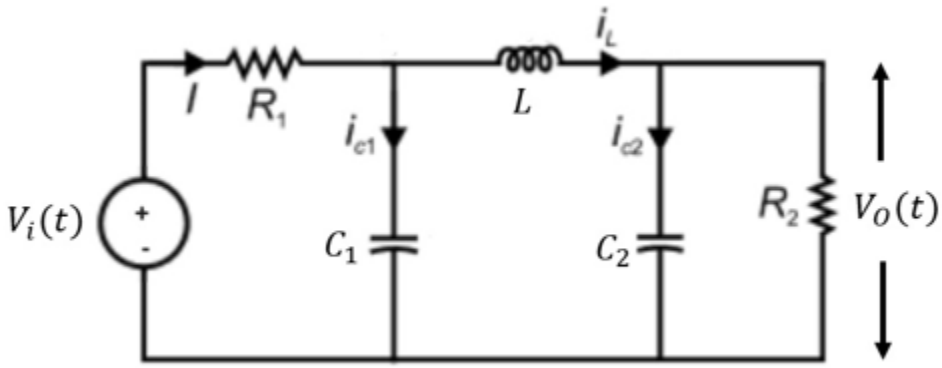

Fig Q5A

(5)

5B) A PD controller is cascaded to the forward path of a unity feedback system with plant transfer function $G_P(S) = \frac{K}{S(1+\tau S)}$ as shown below. Derive an expression for steady state error when unit ramp input is applied. Also, express damping ratio in terms of the system parameters.

(3)

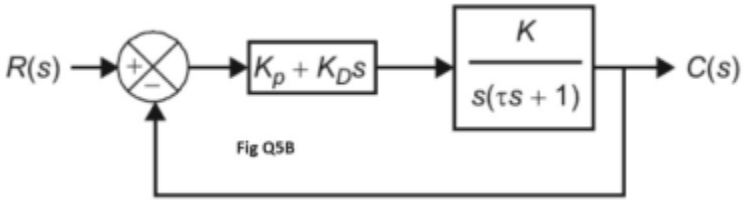

Fig Q5B

5C) Circuit of a Phase-Lead Compensator is shown in Fig. Q5C where R_1=2kΩ R_2=3kΩ and C= 100μF. Identify the frequency where the maximum phase lead occurs. Also, calculate the max phase angle contributed by the Lead network.

(2)

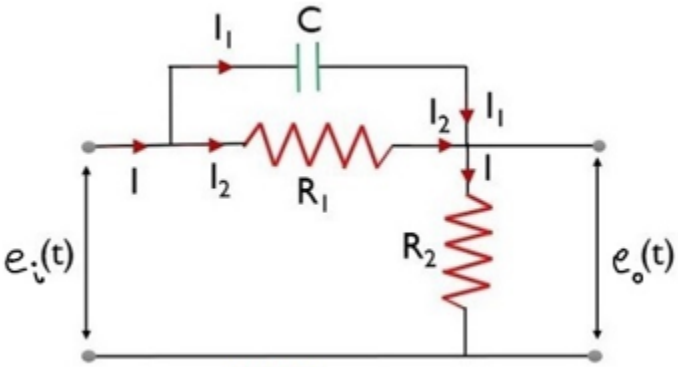

Fig Q5C

-----End-----